CONOFLOW MANUAL LOADING REGULATORS AND MANUAL LOADING STATIONS

GH10/GPH Series

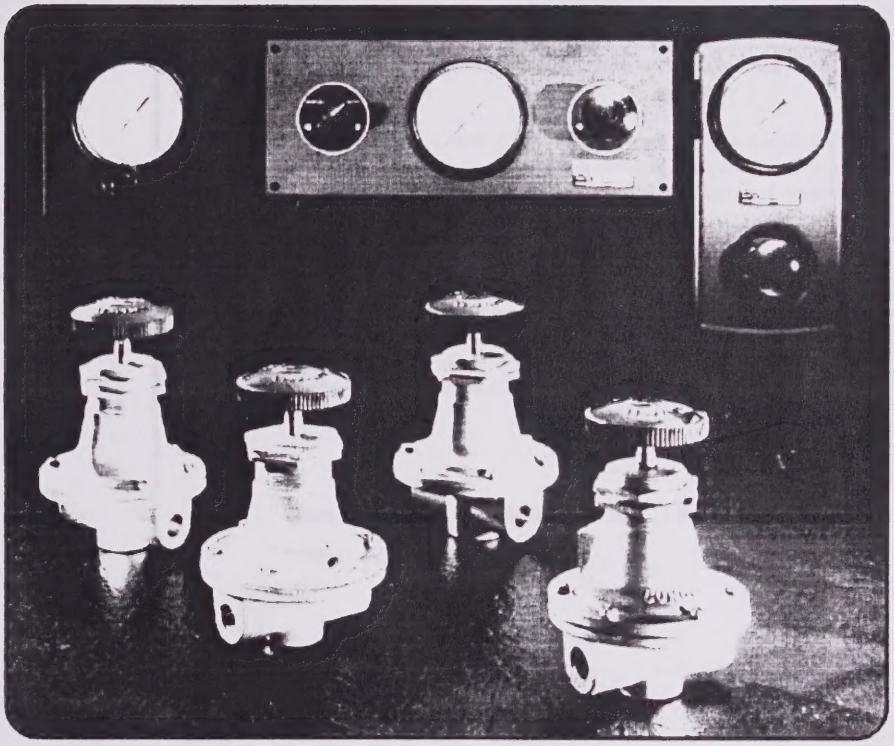

Conoflow's GH10 Manual Loading Regulators are precision units designed for use in laboratory environments, remote loading of pneumatic devices, speed changers and other general purpose applications.

Available in brass, aluminum or stainless steel construction and combinations of the same, the GH10 Regulators cover a wide variety of applications. Maximum supply pressure ratings on the brass units are 200 PSI (1379 kPa) and the stainless steel models are rated at 300 PSI (2068 kPa). The brass units use Buna "N" diaphragms with Teflon/Buna "N" diaphragms with Teflon/Buna "N" sandwich type diaphragms used in the stainless steel models. Other diaphragm materials are available upon request. Regulated pressure ranges of 0-3, 5, 15, 25, 35, 50 and 125 PSI (0-21, 35, 103, 172, 241, 345, and 862 kPa) are standard. For precise and accurate regulation the diaphragms incorporate a relief and constant bleed feature. The constant bleed is an engineered orifice to increase sensitivity by keeping the nozzle plug in a dynamic state, nullifying hysteresis and deadband. For applications with corrosive and/or toxic media, the regulators are available with a no bleed/no relief diaphragm which maintains the medium in the system. Tapped bonnets are available for remote venting of the exhaust gas.

Each unit has two 1/4" NPT connections and can be line, wall or flush-back panel mounted. The easily adjustable handwheels are standard with wrench knob, preset and tamperproof options available.

The GH10 Series Regulators are also used in the Conoflow GPH Series Manual Loading Stations. Each station comes completely assembled and includes the regulator, panel and 3.50" gauge. Standard ranges are 0-15, 0-30, 0-60, 0-100, and 0-160 PSI (0-103, 0-207, 0-414, 0-690, and 0-1103 kPa) and 3-15 PSI (0-100% calibrated) (21-103 kPa).

Widely used in remote positioning of actuators and other pneumatic devices, the GPH Stations are available in panel sizes of 5.00" x 5.50" (GPH05), 6.00" x 6.00" (GPH06), 5.00" x 10.00" (GPH10XX), and 5.25" x 13.50" (GPH10XY). The GPH10XY version incorporates a manual/automatic switch for manual or automatic operation of a device.

These products are guaranteed by Conoflow's high standards of manufacture and years of experience as a leading producer of precision instruments.

OPTIONS:

MOUNTING

Line - All Variations
Wall - Bracket Required
Panel - All Variations (Standard)
Flush-back panel mounted (3-hole)

ADJUSTMENT

Knob (Wrench Style) - Optional
Handwheel - Standard
Preset - Factory output setting CAN be field adjusted
Tamperproof - Factory output setting CANNOT be field adjusted

DIMENSIONAL DATA - ADVERTISING DRAWINGS:

1) GH10: A17-2
2) GPH10: A22-2
3) GPH10XY: A22-2
4) GPH05/06: A22-3

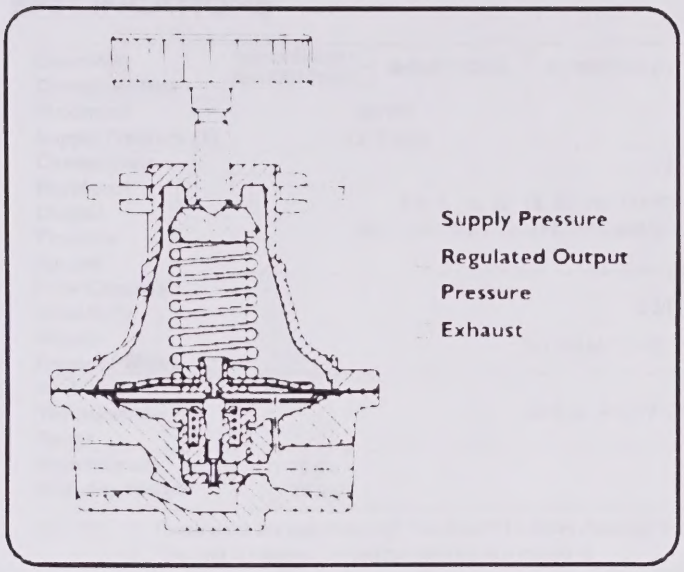

Figure 1. GH10 Series. Bleed and Relief Diaphragm

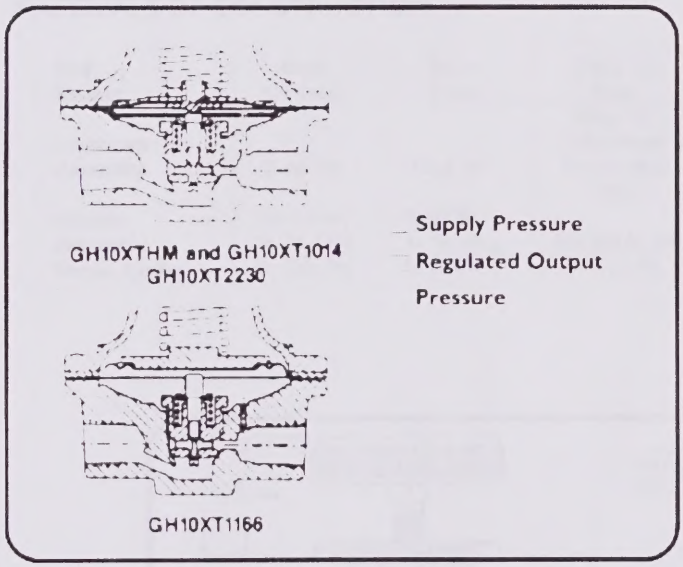

Figure 2. GH10 Series. No Bleed/No Relief Diaphragm

PRINCIPLE OF OPERATION

(Figure 1)
Turning the handwheel changes the force exerted by the range spring on the diaphragm assembly. In equilibrium, the force exerted by the range spring is balanced by the force from the output pressure acting underneath the diaphragm assembly.

An unbalance between the output pressure and the range spring force causes a corresponding reaction in the diaphragm and nozzle assemblies. If the output pressure rises above the set pressure, the diaphragm seat is lifted from the plug, venting the excess pressure to atmosphere until equilibrium is reached. If the output pressure drops below the set pressure, the unbalanced force from the range spring acts through the diaphragm assembly unseating the nozzle plug. This allows supply pressure to flow through the nozzle to the downstream port increasing the output pressure. The output pressure increases until it balances the force on the diaphragm assembly by the range spring. At equilibrium, the ball assumes a position which supplies the required flow while maintaining the output pressure at the set pressure.

The constant bleed feature is used in applications where the flow demand is low. The constant bleed keeps the diaphragm in a dynamic state by preventing the nozzle from closing completely. This increases both the sensitivity and the stability of the regulator.

(Figure 2)
A no bleed/no relief diaphragm assembly is used to prevent the process medium from exhausting to atmosphere. This option is typically used with liquids and toxic gases. The principle of operation is the same as above except that excess output pressure is not vented to atmosphere. Instead, as the diaphragm seat lifts off of the plug and the nozzle closes, the excess pressure is relieved downstream.

Chart 2. Flow Characteristics. GH10, 0-25 PSIG Range

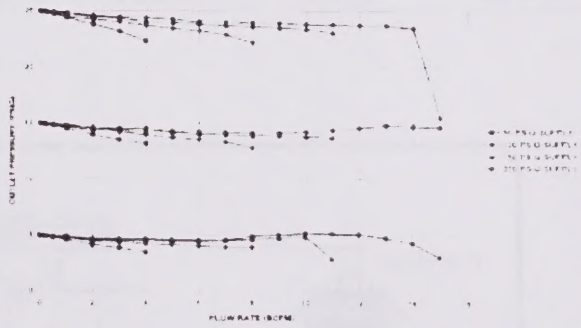

Chart 1. Flow Characteristics. GH10, 0-5 PSIG Range

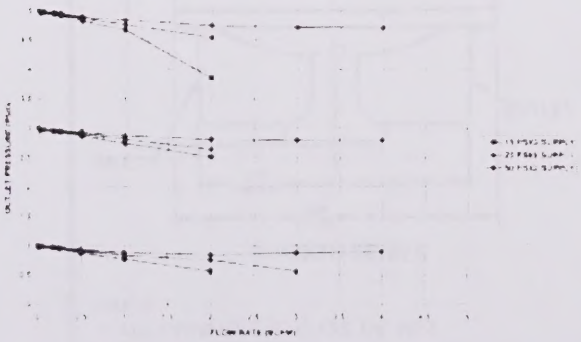

Chart 3. Flow Characteristics. GH10, 0-125 PSIG Range

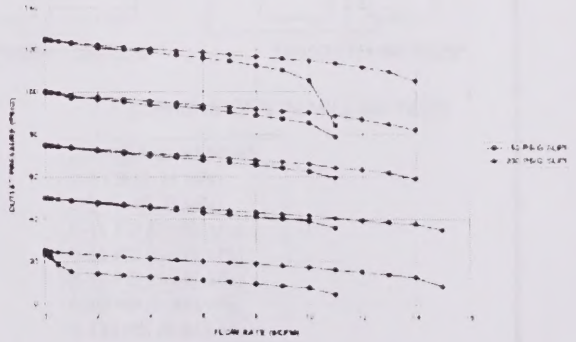

Digitized by the Internet Archive
in 2026 with funding from
University of Toronto

https://archive.org/details/uoftmanuals002

SPECIFICATIONS

Operating Characteristics	GH10XTHCXXX_ GH10XTHMXXX_	GH10XTHCXBX_	GH10XT1014_(1)	GH10XT2230_(1)	GH10XT11166_(1)(2)	GH10XTHRXKX_	GH10XTHHXSX_
Maximum Supply Pressure (3)	200 PSI (1379 kPa)		300 PSI (2068 kPa)				
Connections	1/4" NPT (No Gauge Ports)						
Regulated Output Pressure Ranges	0-3, 5, 15, 25, 35, 50 and 125 PSI (0-21, 35, 103, 172, 241, 345, and 862 kPa)				0-35 and 60PSI (0-241 and 414 kPa)	0-3, 5, 15, 25, 35, 50 and 125 PSI (0-21, 35, 103, 172, 241, 345, and 862 kPa)	
Flow Capacity	See Flow Graphs						
Sensitivity	0.20" (0.51 cm) H_2O (w/relief and bleed)						
Supply Pressure Effect	0.1 PSI for 25 PSI (0.69 kPa for 172 kPa) Change in Supply Pressure						
Ambient Temperature Range	-20°F to +150°F (29°C to + 66°C) (w/Buna "N" diaphragm)						
Approximate Shipping Weight	1.75 lbs. (0.79 Kg)	2.00 (0.91 Kg)					

NOTES: 1. These units are supplied with No Bleed/No Relief diaphragms only.
2. This unit is cleaned for oxygen service as a standard.
3. For Maximum Supply Pressure Ratings greater than 200 or 300 PSIG, consult the factory.

MATERIALS OF CONSTRUCTION

Body	Brass	Brass	316 St. Stl.	316 St. Stl.	316 St. Stl	316 St. Stl.	316 St. Stl.
Bonnet	Aluminum	Brass	Brass	Brass	Brass	316 St. Stl.	316 St. Stl.
Diaphragm Assembly	Buna "N"	Buna "N"	Buna "N" Teflon Faced Process Side Only	Buna "N" Teflon Faced Process Side Only	Ni-Span "C"	Teflon/Buna "N"/ Teflon	Teflon/Buna "N"/ Teflon
Nozzle Assembly	Brass Body St. Stl. Plug	Brass Body St. Stl. Plug	302/303 St. Stl.	316 St. Stl.	302-303 St. Stl.	302/303 St. Stl.	316 St. Stl.
Range Spring	St. Cad. Plt.	St. Cad. Plt.	St. Cad. Plt.	St. Cad. Plt.	St. Cad. Plt.	316 St. Stl.	316 St. Stl.

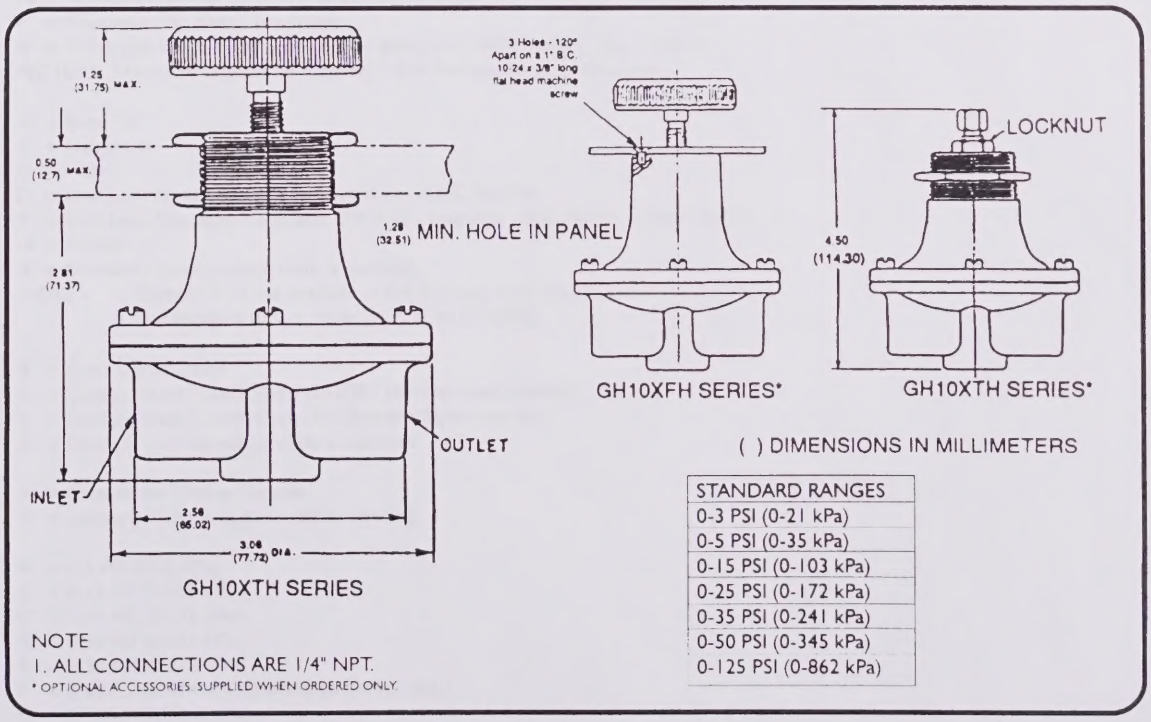

For Certified Dimensional Drawing, refer to A17-2 (GH10).
NOTE: All connections are 1/4" NPT

CONTROL ENGINEERING DATA

Control Engineering Data is intended to provide a single source from which one can determine, in detail, the full scope of the product line. In addition to materials of construction and diaphragm selection, it also provides all necessary data, regarding adjustment options and range selections. Control Engineering Data also provides a means of communicating, by way of a code number, which is fully descriptive of the product selection.

NOTE: 1. Catalog numbers as received must contain twelve (12) characters.

1-4 Model

GH10 = Regulator - Manual Loading - For dimensional data, refer to Drawing A17-2.

5 Operational Features

X = Standard

6 Bonnet Options

A = Bonnet w/1/8" NPT Tapped Vent
F = Tapped Bonnet for Flush Back Panel Mounting
NOTE: This option is standard on the GH10XF.
S = Plain Bonnet
T = Threaded Bonnet (Standard)

7 Adjustment Selections

B = Long Handwheel w/Full Hex Nut
C = Tamperproof (Factory output setting CANNOT be field adjusted) (See Notes 1 and 2)
H = Handwheel (Standard)
K = Knob (Wrench Style)
P = Preset (Factory output setting CAN be field adjusted) (See Notes 1 and 2)
NOTES: 1. Customer must specify output setting, supply pressure and flow.
2. For list price adder, refer to price list CP-5000.

8 Diaphragm Selections

The catalog number(s) listed under each diaphragm option is the standard diaphragm used in that regulator. These options apply to all output ranges of that unit. For non-standard diaphragm price adders, refer to price list CP-5000.

A = Teflon (Rubber Backed) Corrosive Service On Process Side (No Bleed, No Relief) GH10XT1014_, GHXT2230_
B = Silicone on Glass (No Bleed, No Relief)
C = Buna "N" (w/Relief and Bleed) (See Note 1) GH10XTHCXXX_, GH10XFHCXXX_, GH10XTHCXBX_
D = Neoprene (w/Relief, No Bleed)
E = Buna "N" (w/Relief, No Bleed)
F = Viton on Nomex (No Bleed, No Relief)
G = Silicone on Glass (w/Relief, No Bleed)
H = Teflon (Sandwich Type - w/Relief, No Bleed) GH10XTHHXSX_
J = Viton on Nomex (w/Relief, No Bleed)
L = Nordel on Nomex (EPDM) (w/Relief, No Bleed)
M = Buna "N" (No Bleed, No Relief) GH10XTHMXXX_, GH10XFHMXXX_
N = Nordel on Nomex (EPDM) (No Bleed, No Relief)
P = Neoprene (No Bleed, No Relief)
R = Teflon (Sandwich Type - w/Relief and Bleed) GH10XTHRXKX_ (See Note 1)
NOTE: 1. This option cannot be supplied in 316 Stainless Steel construction.

9 Seat Selections

A = Buna "N"
B = Neoprene
C = Viton
D = Low Leak Nozzle w/Metal Set GH10/20 - 20CC Air/Min.
F = Low Leak Nozzle w/Metal Seat GH10/20 - Less than 15CC Air/Min. (See Note 1)
N = Nordel
X = Standard - Unless option code is specified
NOTES: 1. Option "F" is not available in 316 Stainless Steel Construction.
2. For list price adders, refer to price list CP-5000.

10 Material Options

B = Brass Construction
K = Stainless Steel Construction (302/303 Stainless Steel Internals)
S = Stainless Steel Construction (316 Stainless Steel Internals)
X = Standard - Unless option code is specified.

11 Cleaning Options

A = Cleaned for Oxygen Service
X = Standard - Unless option code is specified.

12 Range Selections

A = 0-5 PSI (0-35 kPa)
B = 0-15 PSI (0-103 kPa)
C = 0-25 PSI (0-172 kPa)
D = 0-35 PSI (0-241 kPa)
E = 0-50 PSI (0-345 kPa)
F = 0-60 PSI (0-414 kPa) (For Model "1166" only)
G = 0-125 PSI (0-862 kPa)
L = 0-3 PSI (0-21 kPa)

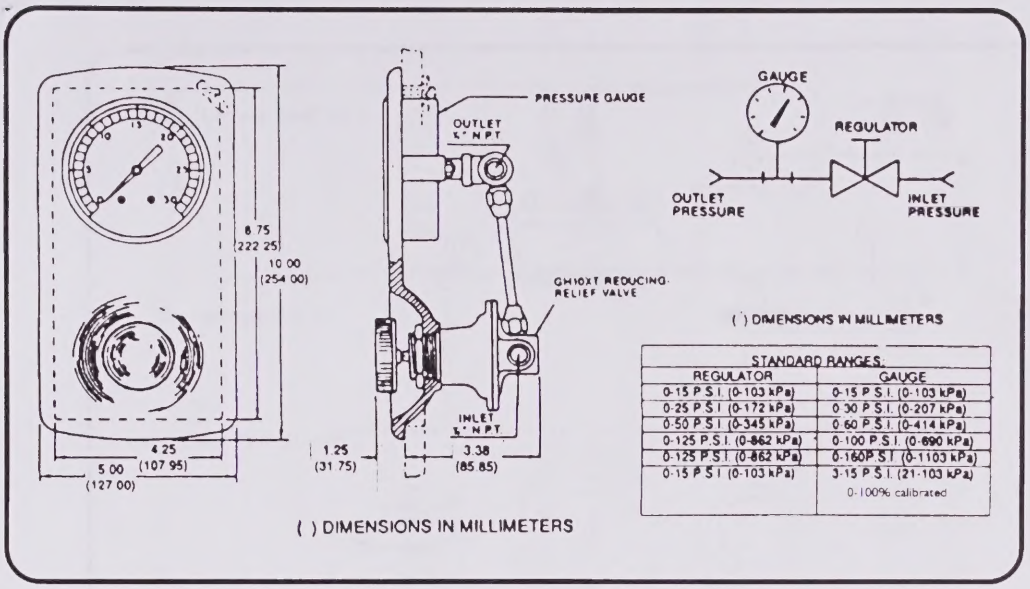

STANDARD RANGES:	
REGULATOR	GAUGE
0-15 P.S.I. (0-103 kPa)	0-15 P.S.I. (0-103 kPa)
0-25 P.S.I. (0-172 kPa)	0-30 P.S.I. (0-207 kPa)
0-50 P.S.I. (0-345 kPa)	0-60 P.S.I. (0-414 kPa)
0-125 P.S.I. (0-862 kPa)	0-100 P.S.I. (0-690 kPa)
0-125 P.S.I. (0-862 kPa)	0-160 P.S.I. (0-1103 kPa)
0-15 P.S.I. (0-103 kPa)	3-15 P.S.I. (21-103 kPa) 0-100% calibrated

For Certified Dimensional Drawing Refer to A22-1.
Approximate Shipping Weight 4-3/4 lbs. (2.15 Kg).

MODEL	A	B	C	D	E	F	G
GPH05	4 9/16	4 9/16	2 3/4	5 3/4	5	1 3/8	2 3/16
GPH06	5 9/16	5 9/16	3	6	6	1 3/8	2 3/4

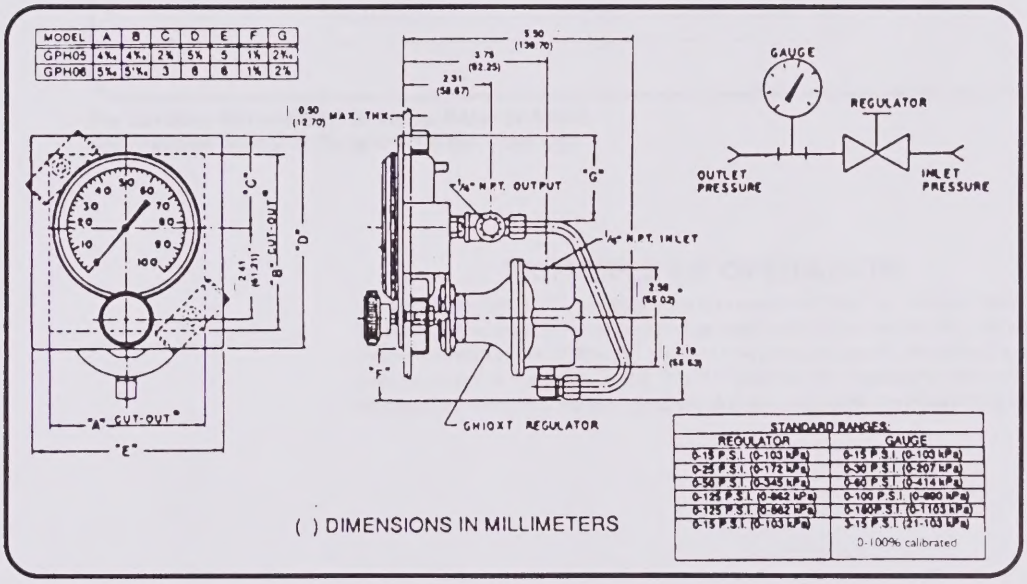

STANDARD RANGES:	
REGULATOR	GAUGE
0-15 P.S.I. (0-103 kPa)	0-15 P.S.I. (0-103 kPa)
0-25 P.S.I. (0-172 kPa)	0-30 P.S.I. (0-207 kPa)
0-50 P.S.I. (0-345 kPa)	0-60 P.S.I. (0-414 kPa)
0-125 P.S.I. (0-862 kPa)	0-100 P.S.I. (0-690 kPa)
0-125 P.S.I. (0-862 kPa)	0-160 P.S.I. (0-1103 kPa)
0-15 P.S.I. (0-103 kPa)	3-15 P.S.I. (21-103 kPa) 0-100% calibrated

For Certified Dimensional Drawing Refer to A22-3.
Approximate Shipping Weight 4-3/4 lbs. (2.15 Kg).

PRINCIPLE OF OPERATION (GPH05/06/10 PANEL)

The Conoflow remote manual loading stations are used to transmit and monitor a pressure signal for pneumatic instrumentation. Each unit consists of a Conoflow Model GH10 regulator and a precision gauge connected directly to the output of the regulator. Turning the adjusting knob clockwise increases the force on the regulator range spring which results in an increase in output pressure. Turning the knob counterclockwise decreases the force on the range spring reducing the output pressure.

CONTROL ENGINEERING DATA

NOTE: 1. Catalog numbers as received must contain eight (8) characters.

1-5 Models	GPH05 = Panel - Manual Loading Station (5" x 5.50" - Steel Panel) GPH06 = Panel - Manual Loading Station (6" x 6" - Steel Panel) GPH10 = Panel - Manual Loading Station (5" x 10" - Molded Panel) NOTE: 1. The GPH Series Manual Loading Station Regulator has a constant bleed and relief diaphragm.
6 Future Options	X = Absence of Specification.
7 Operational Feature	X = Absence of Specification.
8 Range Selections	NOTE: Specify Gauge Range when ordering B = 0-15 PSI (0-103 kPa) (Regulator 0-15 PSI) F = 0-60 PSI (0-414 kPa) (Regulator 0-50 PSI) H = 0-30 PSI (0-207 kPa) (Regulator 0-25 PSI) J = 0-100 PSI (0-690 kPa) (Regulator 0-125 PSI) K = 0-160 PSI (0-1103 kPa) (Regulator 0-125 PSI) M = 3-15 PSI - 0-100% Calibrated (Regulator 0-15 PSI)

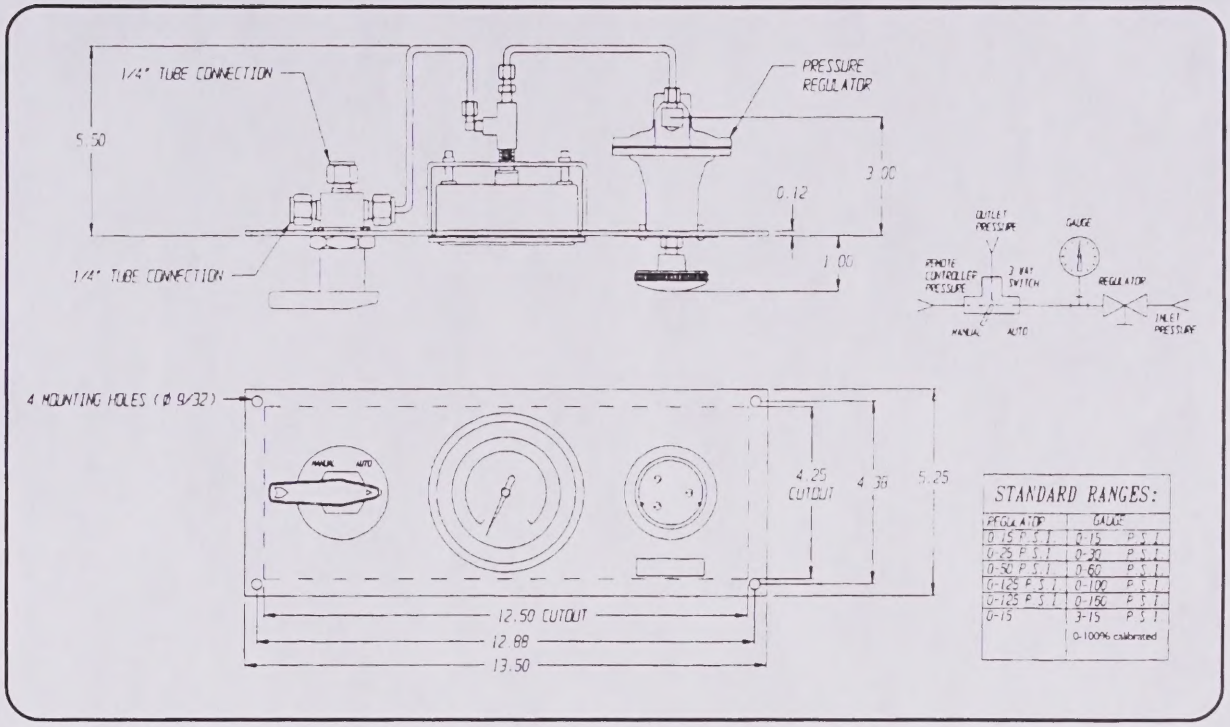

For Certified Dimensional Drawing, Refer to A22-2.
Approximate Shipping Weight 6-3/4 lbs. (3.06 Kg.)

PRINCIPLE OF OPERATION

On the Model GPH10XY, a bypass valve is provided to allow the pressure signal to be controlled at the panel or at an alternate location such as an automatic controller. With the switch in the "MANUAL" position, the pressure signal is controlled by the adjusting knob in the panel. In the "AUTO" position the regulator in the panel is bypassed and control is transferred to the alternate controller provided by the user.

CONTROL ENGINEERING DATA

NOTE: 1. Catalog numbers as received must contain eight (8) characters.

1-5 Model	GPH10 = Panel - Manual Loading Station (5.25" x 13.50" - Steel Panel) NOTE: 1. The GPH Series Manual Loading Station Regulator has a constant bleed and relief diaphragm.
6 Future Options	X = Absence of Specification.
7 Operational Feature	Y = Auto-Manual Switch (GPH10 Only)
8 Range Selections	NOTE: Specify Gauge Range when ordering B = 0-15 PSI (0-103 kPa) (Regulator 0-15 PSI) F = 0-60 PSI (0-414 kPa) (Regulator 0-50 PSI) H = 0-30 PSI (0-207 kPa) (Regulator 0-25 PSI) J = 0-100 PSI (0-690 kPa) (Regulator 0-125 PSI) K = 0-160 PSI (0-1103 kPa) (Regulator 0-125 PSI) M = 3-15 PSI - 0-100% Calibrated (Regulator 0-15 PSI)